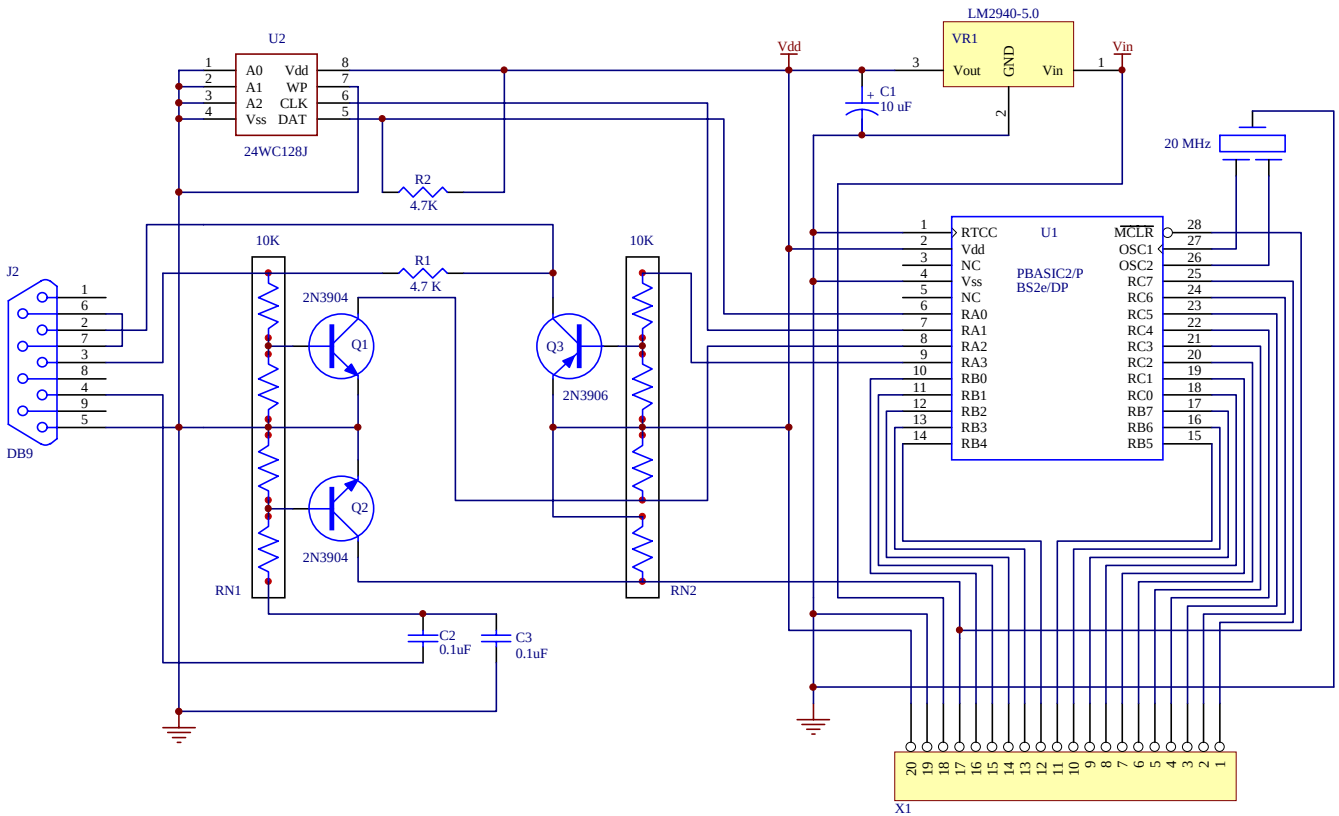

Title		
OEM Basic Stamp 2e		
Size: A	Number	Revision: A
Date: 18-Sep-2000		Sheet 1 of 1
File: C:\Client98\Sch98\SCHs\OemBS2e.sch		Drawn By: John Barrowman