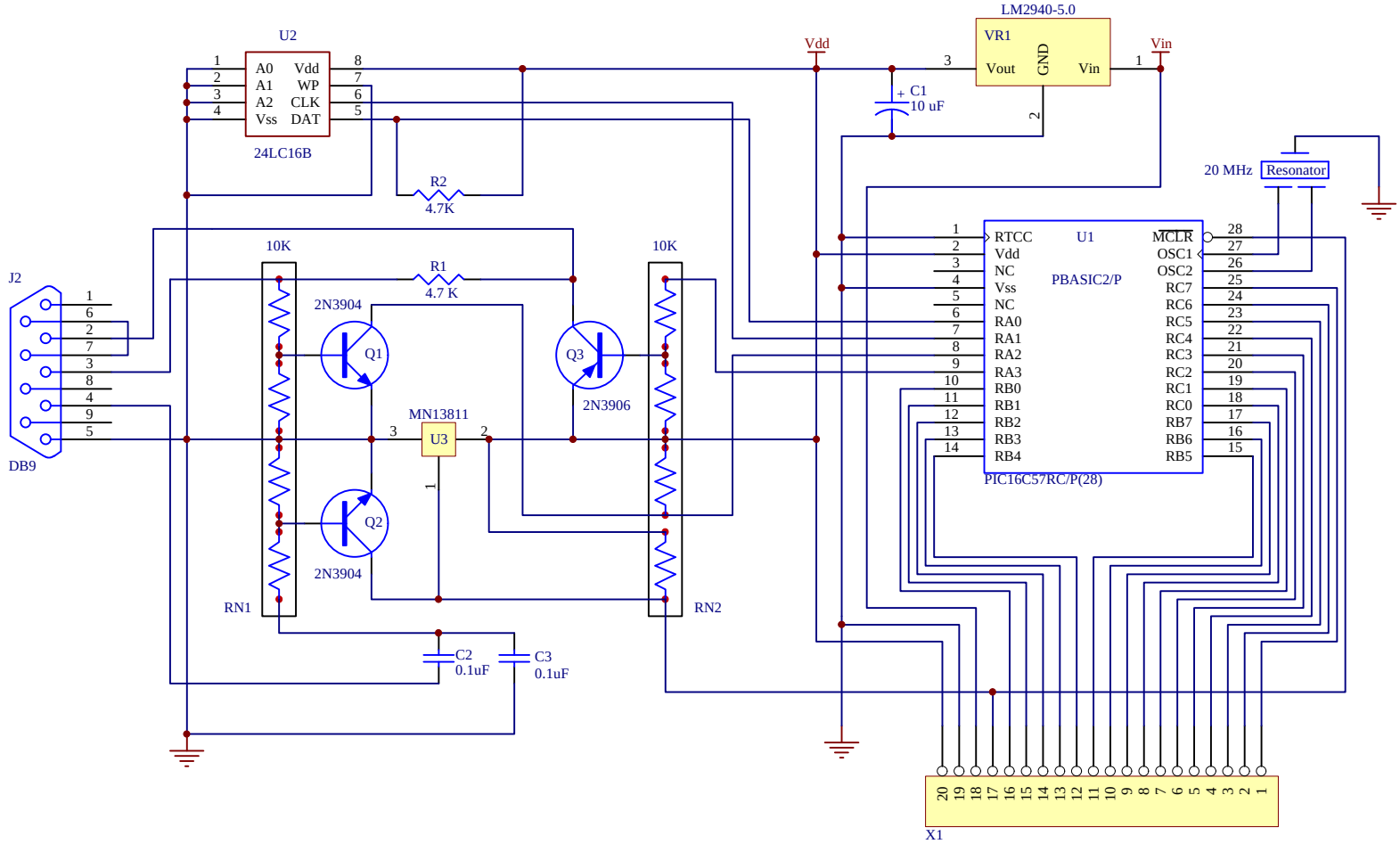

Title	OEM Basic Stamp 2		
Size A	Number		Revision A
Date:	27-Mar-2000	Sheet 1 of 1	
File:	C:\Client98\Sch98\SCHs\OemBS2.sch	Drawn By:	John Barrowman