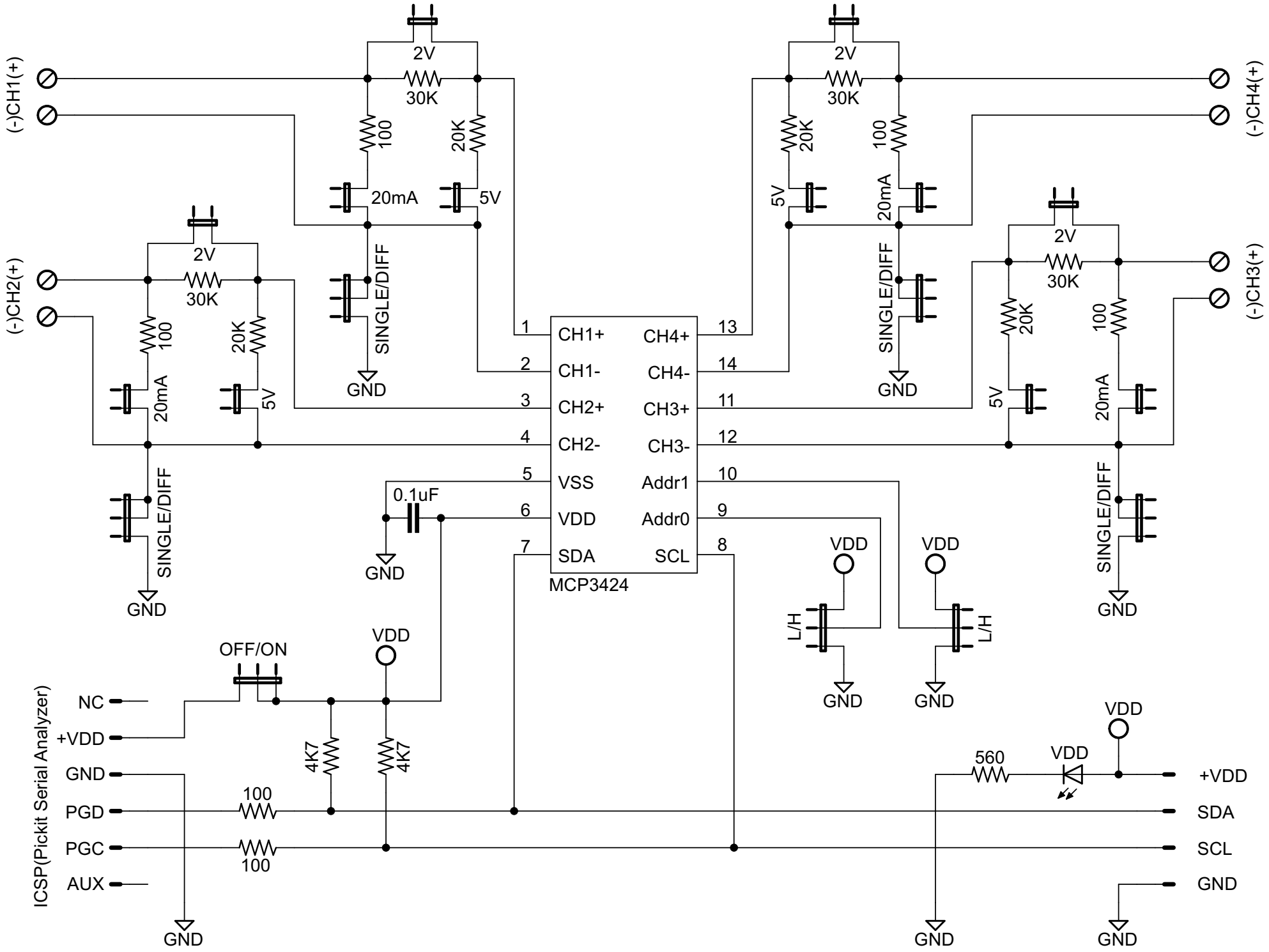
(-)CH1(+)
(-)CH2(+)
(-)CH3(+)
(-)CH4(+)
2V
30K
100
20K
20mA
5V
SINGLE/DIFF
GND
CH1+
CH1-
CH2+
CH2-
VSS
VDD
SDA
CH4+
CH4-
CH3+
CH3-
Addr1
Addr0
SCL
MCP3424
0.1uF
L/H
OFF/ON
4K7
ICSP(Pickit Serial Analyzer)
NC
+VDD
PGD
PGC
AUX
560
SDA
SCL