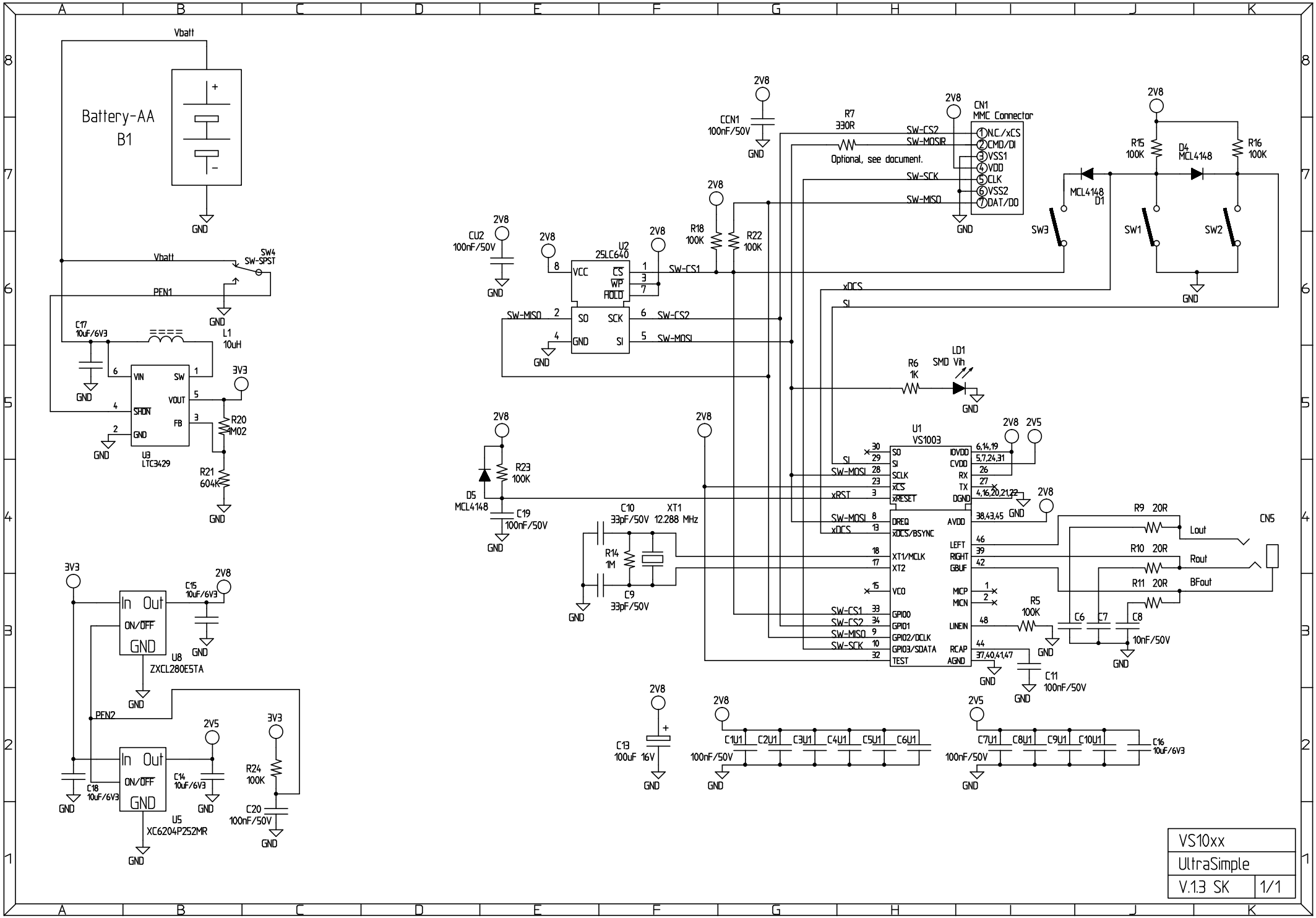
Battery-AA
B1
Vbatt
GND
SW4
SW-SPST
PEN1
C17
10uF/6V3
L1
10uH
VIN
SW
VOUT
SHDN
FB
U3
LTC3429
3V3
R20
4M02
R21
604K
In Out
ON/OFF
U8
ZXCL280E5TA
C15
10uF/6V3
PEN2
C18
10uF/6V3
C14
10uF/6V3
U5
XC6204P252MR
R24
100K
C20
100nF/50V
2V8
2V5
CCN1
100nF/50V
R7
330R
Optional, see document.
CN1
MMC Connector
N.C./xCS
CMD/DI
VSS1
VDD
CLK
VSS2
DAT/DO
SW-CS2
SW-MOSIR
SW-SCK
SW-MISO
R15
100K
D4
MCL4148
R16
100K
MCL4148
D1
SW3
SW1
SW2
CU2
100nF/50V
U2
25LC640
VCC
CS
WP
HOLD
SO
SCK
GND
SI
SW-CS1
SW-MOSI
R18
100K
R22
100K
xDCS
SI
R6
1K
LD1
SMD Vih
R23
100K
D5
MCL4148
C19
100nF/50V
C10
33pF/50V
XT1
12.288 MHz
R14
1M
C9
33pF/50V
U1
VS1003
SO
SI
SCLK
xCS
xRESET
DREQ
xDCS/BSYNC
XT1/MCLK
XT2
VCO
GPIO0
GPIO1
GPIO2/DCLK
GPIO3/SDATA
TEST
IOVDD
CVDD
RX
TX
DGND
AVDD
LEFT
RIGHT
GBUF
MICP
MICN
LINEIN
RCAP
AGND
xRST
R9 20R
R10 20R
R11 20R
Lout
Rout
BFout
CN5
R5
100K
C6
C7
C8
10nF/50V
C11
100nF/50V
C13
100uF 16V
C1U1
C2U1
C3U1
C4U1
C5U1
C6U1
100nF/50V
C7U1
C8U1
C9U1
C10U1
C16
10uF/6V3
VS10xx
UltraSimple
V.1.3 SK
1/1